DATENBLATT

RCX-1500-PEG-Serie

HABEN SIE FRAGEN ODER
WÜNSCHEN SIE EIN INDIVIDUELLES ANGEBOT?
Unser Team berät Sie gerne persönlich.

TELEFON + 49 (0) 81 41/36 97-0
TELEFAX + 49 (0) 81 41/36 97-30
E-MAIL info@plug-in.de
WWW.PLUG-IN.DE

ADRESSE
Am Sonnenlicht 5
D-82239 Alling bei München

Erwähnte Firmen- und Produktnamen sind zum Teil eingetragene Warenzeichen der jeweiligen Hersteller.

Vecow

RCX-1500 PEG

Workstation-grade Intel® Xeon®/Core™ i7/i5/i3 (CFL-R) Dual GPU AI Computing System with NVIDIA® Tesla®/Quadro®/GeForce®/AMD Radeon™ Graphics

- 8 cores 9th Generation Intel® Xeon®/Core™ i7/i5/i3 (Coffee Lake Refresh) with workstation-grade Intel® C246 Chipset
- 4 DDR4 2666MHz Memory, up to 128GB (ECC/Non-ECC)
- Supports up to dual 350W NVIDIA® or AMD Graphics card
- Dual NVIDIA® Tesla®/Quadro®/GeForce® graphics card delivers leading AI computing productivity by advanced NVIDIA® CUDA® cores
- Multiple DVI, HDMI and DisplayPort display interfaces support max 11 independent displays, up to 8K Resolution
- 6 external USB 3.1 Gen 2 support up to 10Gbps data transfer
- 2 Independent GigE LAN, iAMT 12.0 supported
- 2 External SIM Socket for WiFi/4G/3G/LTE/GPRS/UMTS
- 4 Front-access 2.5" SSD Tray, RAID 0, 1, 5, 10 supported
- 32 Isolated DIO, 3 COM RS-232/422/485
- 2 M.2 Socket : 1 M.2 Key M, 1 M.2 Key E
- System-oriented power optimization, up to dual 350W independent graphics card
- 6V to 36V wide range power input with 80V Surge Protection
- 12V Power Input for dual independent graphics card
- Configurable Ignition Power Control

Deep Learning

Autonomous Vehicles

Robotic Control

Public Surveillance

8K | SS 10 | Isolated DIO | M.2 | SIM | TPM | 6V~36V | PEG 12V | 80V | -25° 45°

EN50155 | CE | FC | RoHS

Specifications

System

Processor	8 cores Intel® Xeon®/Core™ i7/i5/i3 Processor (CFL-R S)
Chipset	Intel® C246
BIOS	AMI
SIO	IT8786E
Memory	4 DDR4 2666MHz SO-DIMM, up to 128GB (ECC/Non-ECC)
OS	Windows 10, Linux

I/O Interface

Serial	3 COM RS-232/422/485 (ESD 8KV)
USB	- 6 USB 3.1 Gen 2 (External) - 1 USB 2.0 (Internal)
Isolated DIO	32 Isolated DIO : 16 DI, 16 DO
LED	Power, HDD, Wireless
SIM Card	2 External SIM Card Socket

Expansion

Mini PCIe	2 Full-size for PCIe/USB/External SIM Card/mSATA
M.2	1 M.2 Key E Socket
PCIe	**RCX-1540 :** - 2 PCIe x16 Slot with x8 signal - 1 PCIe x16 Slot with x4 signal - 1 PCIe x4 Slot with x1 signal **RCX-1520 :** 2 PCIe x16 Slot with x8 signal

Graphics

Graphics Processor	Intel® UHD Graphics 630 **Independent Graphics 1** : By request **Independent Graphics 2** : By request
Interface	Up to 11 independent displays : - 1 DVI : Up to 1920 x 1200 @60Hz - 1 DisplayPort : Up to 4096 x 2304 @60Hz - 1 Digital Display : Up to 4096 x 2304 @60Hz - By requested Graphics Card

Storage

SATA	4 SATA III (6Gbps) support S/W RAID 0, 1, 5, 10
mSATA	2 SATA III (Mini PCIe Type, 6Gbps)
Storage Device	- 4 Front-access 2.5"SSD/HDD Tray - 1 M.2 Key M Socket

Audio

Audio Codec	Realtek ALC892, 5.1 Channel HD Audio
Audio Interface	1 Mic-in, 1 Line-out

Ethernet

LAN 1	Intel® I219LM GigE LAN supports iAMT 12.0
LAN 2	Intel® I210 GigE LAN

Power

Power Input	- 6V to 36V, DC-in - 12V, PEG Power
Power Interface	**DC-in :** 3-pin Terminal Block : V+, V-, Frame Ground **PEG Power :** 8-pin Terminal Block : 4 V+, 4 V-
Ignition Control	16 Mode (Internal)
Remote Switch	3-pin Terminal Block
Surge Protection	Up to 80V/1ms Transient Power

Others

TPM	Optional Infineon SLB9665 supports TPM 2.0, LPC Interface
Watchdog Timer	Reset : 1 to 255 sec./min. per step
Smart Mgmt.	Wake on LAN, PXE supported
HW Monitor	Monitoring temperature, voltages. Auto throttling control when CPU overheats.

Mechanical

Dimensions	350.0mm x 210.0mm x 198.2mm (13.78" x 8.27" x 7.80")
Weight (w/o Graphics Card)	**RCX-1500R PEG :** 7.1 kg (15.62 lb) **RCX-1500 PEG :** 6.9 kg (15.19 lb)
Mounting	Wallmount by mounting bracket

Environment

Operating Temp.	-25°C to 45°C (-13°F to 113°F) Depends on Graphics Card
Storage Temp.	-40°C to 85°C (-40°F to 185°F)
Humidity	5% to 95% Humidity, non-condensing
Relative Humidity	95% @ 45°C
Shock/Vibration	- IEC 61373 : 2010 - Railway Applications : Rolling Stock Equipment, Shock and Vibration Tests
EMC	CE, FCC, EN50155, EN50121-3-2

* The rights of all brand names, product names and trademarks belong to their respective owners.
Copyright © 2020 Vecow Co., Ltd. All rights reserved.

Vecow

Order Information

Model	GigE LAN	SSD Tray	PCIe x8	PCIe x4	PCIe x1	10G USB	SIM	Isolated DIO
RCX-1540R-PEG	2	4	2	1	1	6	2	32
RCX-1540-PEG		NA						
RCX-1520R-PEG		4		NA	NA			
RCX-1520-PEG		NA						

CPU List

Series	CPU	Cores	GHz	TDP (W)	CPU	Cores	GHz	TDP (W)	ECC RAM
Intel® Xeon®	E-2278GE	8	4.7	80	E-2176G	6	4.6	80	Yes
	E-2278GEL	8	3.9	35					
	E-2226GE	6	4.6	80	E-2124G	4	4.5	71	
Intel® Core™	i7-9700E	8	4.4	65	i7-8700	6	4.6	65	N/A
	i7-9700TE		3.8	35	i7-8700T	6	4	35	
	i5-9500E	6	4.2	65	i5-8500	6	4.1	65	
	i5-9500TE		3.6	35	i5-8500T	6	3.5	35	
	i3-9100E	4	3.7	65	i3-8100	4	3.6	65	Yes
	i3-9100TE		3.2	35	i3-8100T	4	3.1	35	

Accessories

DDR4 32G	Certified DDR4 32GB 2666MHz RAM
DDR4 16G	Certified DDR4 16GB 2666/2400/2133 MHz RAM
DDR4 8G	Certified DDR4 8GB 2666/2400/2133 MHz RAM
DDR4 4G	Certified DDR4 4GB 2666/2400/2133 MHz RAM
PWA-160WB-WT	160W, 24V, 85V AC to 264V AC Power Adaptor with 3-pin Terminal Block (7.62mm pitch), Wide Temperature -30°C to +70°C
PWS-700W-12V	700W, 12V, 90V AC to 264V AC Power Supply
PWS-1500W-12V	1500W, 12V, 90V AC to 264V AC Power Supply
FAN Sink	Fan Sink for RCX-1000 Series
TMK2-20P-100	Terminal Block 20-pin to Terminal Block 20-pin Cable, 100cm
TMK2-20P-500	Terminal Block 20-pin to Terminal Block 20-pin Cable, 500cm
TMB-TMBK-20P	Terminal Board with One 20-pin Terminal Block Connector and DIN-Rail Mounting
4G Module	Mini PCIe 4G/GPS Module with Antenna
WiFi & Bluetooth	WiFi & Bluetooth Module with Antenna

Dimensions & Drawing

Unit : mm (inch)

RCX-1500R PEG

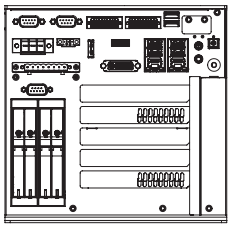
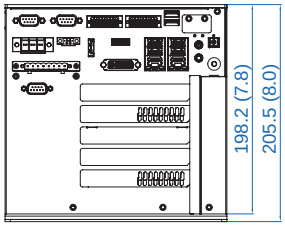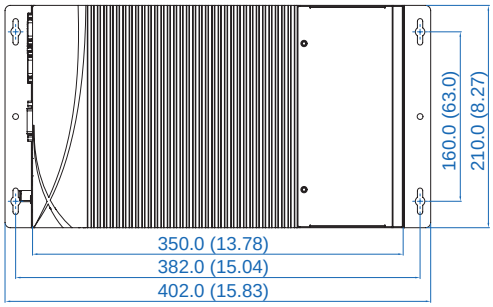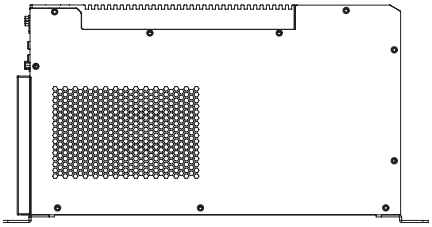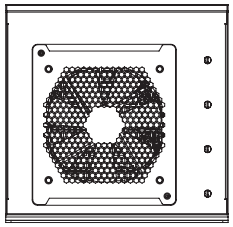
RCX-1500 PEG