DATENBLATT

PO-128L(PCI)H

HABEN SIE FRAGEN ODER
WÜNSCHEN SIE EIN INDIVIDUELLES ANGEBOT?
Unser Team berät Sie gerne persönlich.

TELEFON + 49 (0) 81 41/36 97-0
TELEFAX + 49 (0) 81 41/36 97-30
E-MAIL info@plug-in.de
WWW.PLUG-IN.DE

ADRESSE
Am Sonnenlicht 5
D-82239 Alling bei München

Erwähnte Firmen- und Produktnamen sind zum Teil eingetragene Warenzeichen der jeweiligen Hersteller.

Digital Output Board with Optocoupler Isolation for PCI

PO-128L(PCI)H

* Specifications, color and design of the products are subject to change without notice.

This product is a PCI bus-compliant interface board used to provide a digital signal I/O function on a PC.

This product can output digital signals at 12 - 24VDC.

This product features 128 opto-coupler isolated open-collector outputs. In addition, output transistor protection circuit (surge voltage protection and overcurrent protection).

Windows/Linux driver is bundled with this product.

Possible to be used as a data recording device for LabVIEW, with dedicated libraries.

* The contents in this document are subject to change without notice.
* Visit the CONTEC website to check the latest details in the document.
* The information in the data sheets is as of April, 2018.

Features

- Opto-coupler isolated input (compatible with current sink output) and opto-coupler isolated open-collector output (current sink type)

PO-128L(PCI)H has the 128ch of opto-coupler isolated open-collector output (current sink type) whose response speed is 200µsec. Common terminal provided per 16channels, capable of supporting a different external power supply. Supporting driver voltages of 12 - 24 VDC for I/O.

- Opto-coupler bus isolation

As the PC is isolated from the input and output interfaces by opto-couplers, this product has excellent noise performance.

- Windows/Linux compatible driver libraries are attached.

Using the attached driver library API-PAC(W32) makes it possible to create applications of Windows/Linux. In addition, a diagnostic program by which the operations of hardware can be checked is provided.

- This product has a digital filter to prevent wrong recognition of input signals from carrying noise or a chattering.

This product has a digital filter to prevent wrong recognition of input signals from carrying noise or a chattering. All input terminals can be added a digital filter, and the setting can be performed by software.

- The output circuit, has a built-in Zener diode and the overcurrent protection circuit of the surge voltage protection.

Zener diodes are connected to the output circuits to protect against surge voltages. In addition, the output circuit, it attaches the overcurrent protection circuit at the output 8-channel unit. The output rating is max. 35VDC, 100mA per channel.

- LabVIEW is supported by a plug-in of dedicated library.

Using the dedicated library makes it possible to make a LabVIEW application.

Specification

Item		Specifications
Output		
Type		Optocoupler Isolated Open Collector Output (current sinking type) (Negative logic *1)
Number of Channels		128 channels (16 channels share a negative common)
Rate	Voltage	35VDC(Max.)
	Current	100mA/channel (Max.)
Residual voltage with output on		0.5V or less (Output current ≤ 50mA), 1.0V or less (Output current ≤ 100mA)
Surge protector		Zener diode RD47FM(NEC) or equivalent
Response time		200µsec(Max.)
Common		
I/O address		Any 32-byte boundary
Interrupt level		not use
Boards in one system		Maximum of 16 boards can be install in a same system.
Isolated voltage (I/O-to-system) *2		250Vrms
External power supply		12 - 24VDC(±10%)
Power consumption		5VDC 700mA(Max.)
Operating condition		0 - 50°C, 10 - 90%RH (No condensation)
Connecting distance		50m(Typ.)(depending on wiring environment)
PCI bus specification		32bit, 33MHz, Universal key shapes supported *3
Dimension (mm)		176.41(L) x 105.68(H) *4
Weight		215g
Standard		VCCI Class A, CE Marking (EMC Directive Class A, RoHS Directive)

*1 Data "0" and "1" correspond to the High and Low levels, respectively.
*2 There was no electrical breakdown after having impressed the specification voltage with AC50/60Hz and DC for one minute to the insulation part.
*3 This board requires power supply at +5V from an expansion slot (it does not work on a machine with a +3.3V power supply alone).
*4 The size of board No.7231 is 176.41 (L) x 106.68 (H) mm.

Board Dimensions

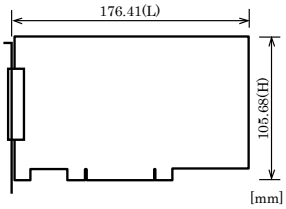

The standard outside dimension (L) is the distance from the end of the board to the outer surface of the slot cover.

Support Software

Windows version of digital I/O driver API-DIO(WDM)/API-DIO(98/PC)
[Stored on the bundled disk driver library API-PAC(W32)]
The API-DIO(WDM) is the Windows version driver library software that provides products in the form of Win32 API functions (DLL). Various sample programs such as Visual Basic and Visual C++, etc and diagnostic program *1useful for checking operation is provided.
For more details on the supported OS, applicable language and new information, please visit the CONTEC's Web site.

Linux version of digital I/O driver API-DIO(LNX)
[Stored on the bundled disk driver library API-PAC(W32)]
The API-DIO(LNX) is the Linux version driver software which provides device drivers (modules) by shared library and kernel version. Various sample programs of gcc are provided.
For more details on the supported OS, applicable language and new information, please visit the CONTEC's Web site.

LabVIEW-support data acquisition library DAQfast for LabVIEW
(Available for downloading (free of charge) from the CONTEC web site.)
This is a data collection library to use in the LabVIEW by National Instruments. With Polymorphic VI, our design enables a LabVIEW user to operate seamlessly. Our aim is that the customers to perform easily, promptly what they wish to do.
For more details on the library and download of DAQfast for LabVIEW, please visit the CONTEC's Web site.
Data acquisition library for LabVIEW VI-DAQ (Available for downloading (free of charge) from the CONTEC web site.)
This is a VI library to use in National Instruments LabVIEW. VI-DAQ is created with a function form similar to that of LabVIEW's Data Acquisition VI, allowing you to use various devices without complicated settings.
For more details on the library and download of VI-DAQ, please visit the CONTEC's Web site.

Cable & Connector (Option)

Shielded Cable With Two 100pin Connector
: PCB100PS-0.5 (0.5m)
: PCB100PS-1.5 (1.5m)
: PCB100PS-3 (3m)
: PCB100PS-5 (5m)

Connection Conversion Shield Cable (100P→96P)
: PCB100/96PS-1.5 (1.5m)
: PCB100/96PS-3 (3m)
: PCB100/96PS-5 (5m)

Flat Cable with One 100-Pin Connector
: PCA100P-1.5(1.5m)
: PCA100P-3(3m)
: PCA100P-5(5m)

Connection Conversion Shield Cable
(100pin→37pin D-SUB x 2) : PCB100WS-1.5(1.5m)
: PCB100WS-3(3m)
: PCB100WS-5(5m)

Accessories (Option)

Screw Terminal Unit (M3 x 100P) : EPD-100A *1*4*6
Screw Terminal Unit (M3 x 96P) : EPD-96A *2*4*6
Screw Terminal Unit (M3.5 x 96P) : EPD-96 *2*4
Terminal Unit for Cables (M2.5 x 96P) : DTP-64A *2*4
Connector Conversion Board (96-Pin→37-Pin x 2)
: CCB-96 *1
Signal Monitor for Digital I/O(64Bits) : CM-64L *2*4
Screw Terminal Unit (M3 x 37P) : EPD-37A *3*5*6
Screw Terminal Unit (M3.5 x 37P) : EPD-37 *3*5
General Purpose Terminal (M3 x 37P) : DTP-3A *3*5
Screw Terminal (M2.6 x 37P) : DTP-4C *3*5

*1 PCB100PS optional cable is required separately.
*2 PCB100/96PS optional cable is required separately.
*3 PCB100WS optional cable is required separately.
*4 If using both the CNA and CNB connectors, two each of the terminal block and cable sets are required.
*5 If using both the CNA and CNB connectors, two cable sets are required.
You will also require sufficient terminal blocks for the number of I/O points you are using.
*6 "Spring-up" type terminal is used to prevent terminal screws from falling off.

* Check the CONTEC's Web site for more information on these options.

Block Diagram

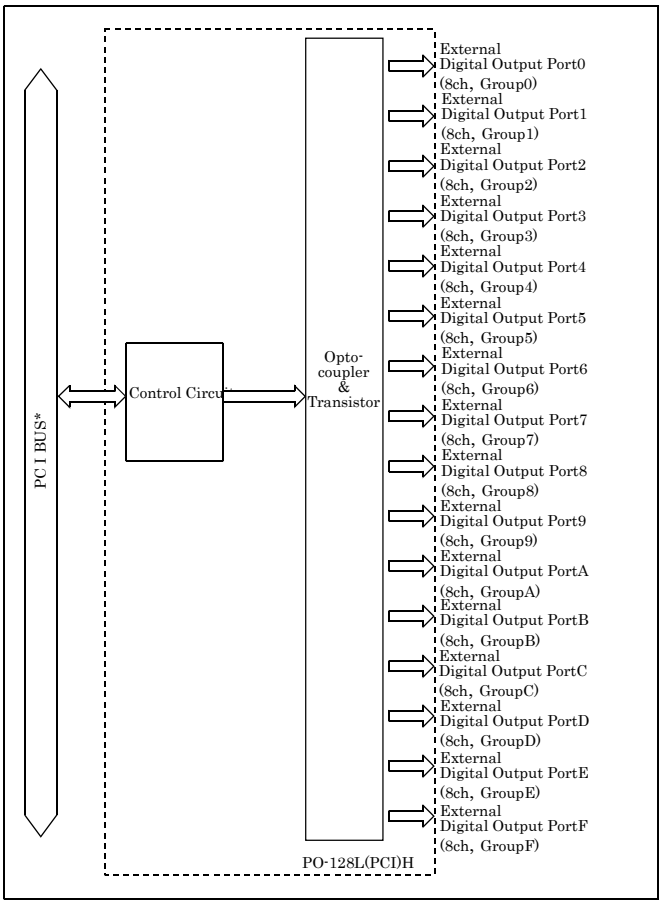

Packing List

Board [PO-128L(PCI)H] …1
First step guide … 1
Disk *1 [API-PAC(W32)] …1
Warranty Certificate…1
Serial Number Label…1

*1 The bundled disk contains the driver software and User's Guide.

Using the On-board Connectors

Connecting a Device to a Connector

To connect an external device to this board, plug the cable from the device into the interface connector (CNA, CNB) shown below.

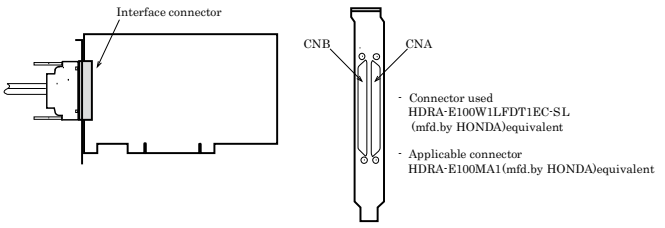

Connector Pin Assignment

Pin Assignments of Interface Connector

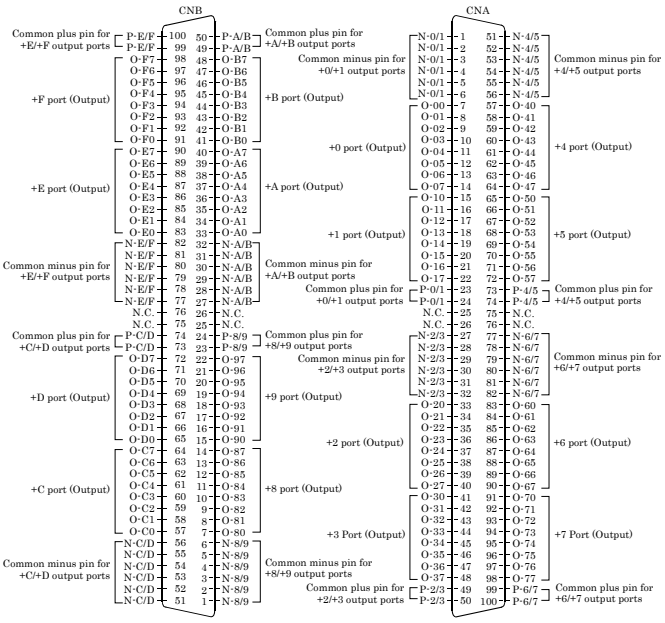

O-00 - O-F7	128 output signal pins. Connect input signals from the external device to these pins.
P-0/1 - P-E/F	Connect the positive side of the external power supply. These pins are common to 16 output signal pins.
N-0/1 - N-E/F	Connect the negative side of the external power supply. These pins are common to 16 output signal pins. A current of 0.3 A is allowable per connector pin. Connect the required number of pins for the total current for the corresponding 16 output signals.
N.C.	This pin is left unconnected.

Connecting Output Signals

Connect the output signals to a current-driven controlled device such as a relay or LED.
The connection requires an external power supply to feed currents.
The board controls turning on/off the current-driven controlled device using a digital value.

Output Circuit

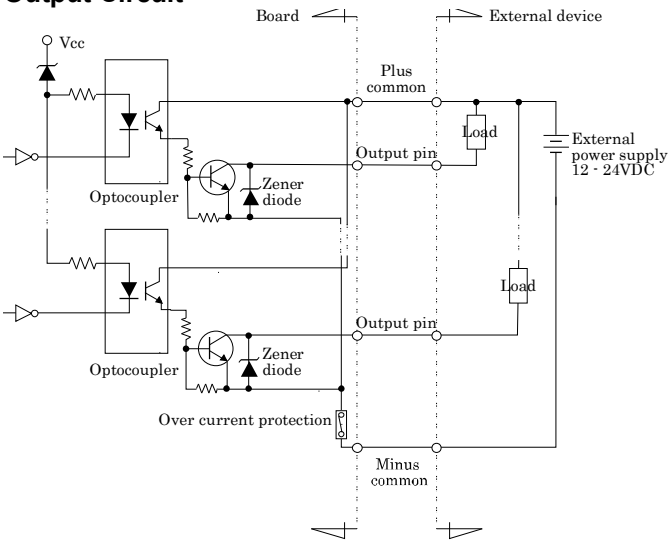

The output circuit of this board is illustrated in the image above. The signal output section is an Optocoupler isolated, open-collector output (current sink type). Driving the output section requires an external power supply.
The rated output current per channel is 100 mA at maximum.
The output section can also be connected to a TTL level input as it uses a low-saturated transistor for output. The residual voltage (low-level voltage) between the collector and emitter with the output on is 0.5 V or less at an output current within 50 mA or at most 1.0 V at an output current within 100 mA.
To protect against surge voltage, a Zener diode is connected to the output transistor. Also, an overcurrent protection circuit is attached to a unit of eight output channels.

⚠ CAUTION
When the PC is turned on, all output are reset to OFF.

Example of Connection to LED

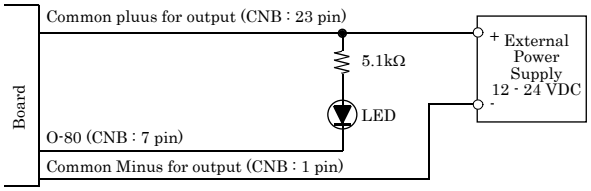

When "1" is output to a relevant bit, the corresponding LED comes on.
When "0" is output to the bit, in contrast, the LED goes out.

Example of Connection to TTL Level Input

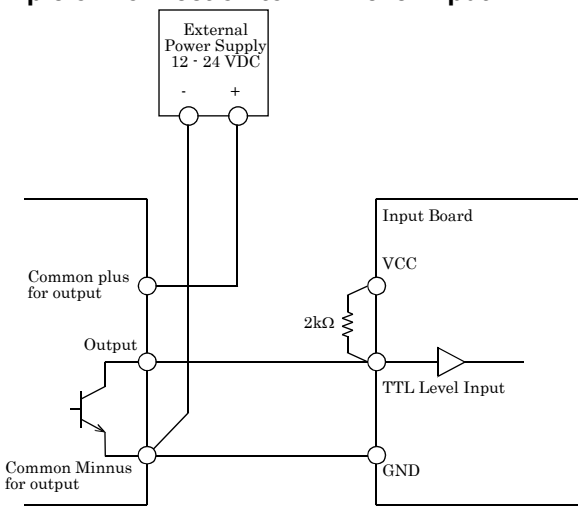

Connecting the Sink Type Output and Sink Output Support Input
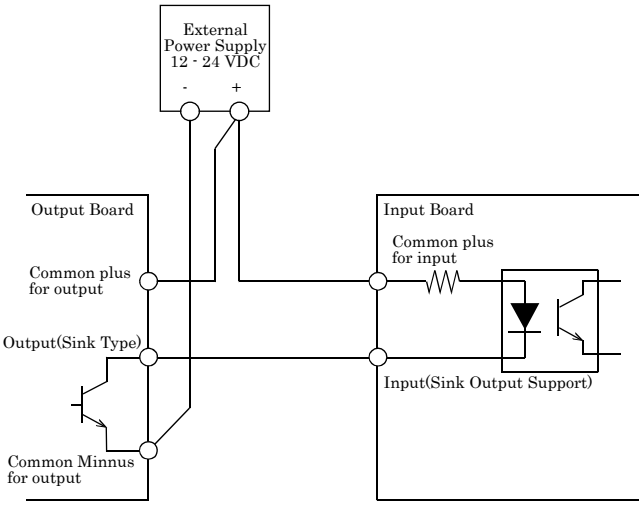
The following example shows a connection between a sink type output (output board) and a sink output support input (input board). Refer to this connection example when you connect such boards to each other.