DATENBLATT

PICE505

HABEN SIE FRAGEN ODER
WÜNSCHEN SIE EIN INDIVIDUELLES ANGEBOT?
Unser Team berät Sie gerne persönlich.

TELEFON + 49 (0) 81 41/36 97-0
TELEFAX + 49 (0) 81 41/36 97-30
E-MAIL info@plug-in.de
WWW.PLUG-IN.DE

ADRESSE
Am Sonnenlicht 5
D-82239 Alling bei München

Erwähnte Firmen- und Produktnamen sind zum Teil eingetragene Warenzeichen der jeweiligen Hersteller.

PICE505

Intel® Celeron® Processor J1900 Quad Core Fanless System

aws qualified device internet of things

Main Features

- Onboard Intel® Celeron® processor J1900 quad core, 2.42GHz
- 1 x HDMI display
- 3 x Intel® I210-IT GbE LAN ports; support WoL, teaming and PXE
- 2 x USB 2.0
- 1 x mini-PCIe socket for optional Wi-Fi/BT modules
- 1 x mini-PCIe socket for optional mSATA storage
- 1 x RJ45 COM serial port for RS232 signal
- Support -5~55 degree C operating temperature
- Support 12V DC input

Product Overview

Powered by the latest generation of Intel® Celeron® processor J1900 (formerly codenamed "Bay Trail"), PICE505 series positions at the intelligent IoT gateway for factory automation and for smart city applications. Up to 4G DDR3L memory, the PICE505 series support operating temperature from -5 up to 55 degree C with 12V DC input with +/-20% range. The PICE505 series have strong connectivity - Ethernet-based LAN port and traditional RS232, mainly for Modbus TCP or Modbus RTU communication. For wireless connectivity, there is 1 x mini-PCIe sockets which can support optional wireless modules for IoT applications, for example, Wi-Fi, Bluetooth module. PICE505 is definitely the best choice for M2M intelligent system as an intelligent IoT gateway.

Specifications

CPU Support
- Onboard Intel® Celeron® processor J1900 quad Core, 2.42GHz

Main Memory
- DDR3L SODIMM slot *1
  - Support 1600 RAM
  - Un buffered and non ECC
  - Support maximum up to 4GB for option

Display Option
- 1 x HDMI display

I/O Interface-Front
- ATX power on/off switch
- 1 x Storage/2 x GPO programmable LED
- 3 x Intel® I210-IT GbE LAN ports; support WoL, teaming and PXE
- 1 x HDMI display output
- 2 x USB 2.0 (500mA per each)
- 2 x Antenna holes for optional Wi-Fi antenna
- 1 x RJ45 COM serial port for RS232 signal

I/O Interface-Rear
- Support 12V DC input

I/O Interface - Internal
- 4 x GPI and 4 x GPO (programmable to GPI or GPO)

Storage Device
- Optional mSATA module
- Onboard 32GB EMMC

Expansion Slot
- 1 x mini-PCIe socket for optional Wi-Fi/BT modules

Power Requirements
- Power input: 12V DC +/-20%
- 1 x Optional 12V, 60W power adapter

Support OS
- Win7 64-bit
- Win10 64-bit

Dimensions
- 162mm (W) x 26mm (H) x 150mm (D) without wall-mount bracket

Construction

Dimension Drawing

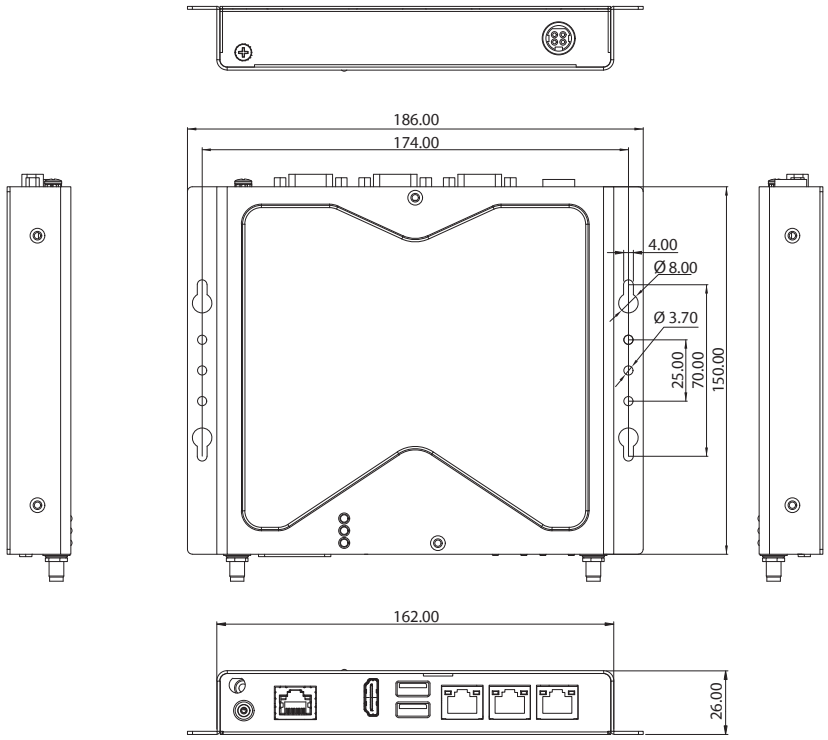

- Metal chassis with fanless design

Environment

- Operating temperature:
  Ambient with air flow: -5°C to 55°C
  (according to IEC60068-2-1, IEC60068-2-2, IEC60068-2-14)
- Storage temperature: -20°C to 75°C
- Relative humidity: 10% to 95% (non-condensing)
- Shock protection:
  - mSATA/EMMC: 50G, half sine, 11ms, IEC60068-2-27
- Vibration protection w/mSATA or EMMC condition:
  - Random: 2Grms @ 5~500 Hz, IEC60068-2-64
  - Sinusoidal: 2Grms @ 5~500 Hz, IEC60068-2-6

Certifications

- CE
- FCC Class A

Ordering Information

- **PICE505 (P/N: 10J00050502X0)**
  Intel® Celeron® processor J1900 quad Core fanless system
- **60W 12V/5A AC/DC power adapter w/o power cord (P/N: 7400060042X00)**

We reserve the right to change specifications and product descriptions at any time without prior notice.