DATENBLATT

N1540-Serie

HABEN SIE FRAGEN ODER
WÜNSCHEN SIE EIN INDIVIDUELLES ANGEBOT?
Unser Team berät Sie gerne persönlich.

TELEFON + 49 (0) 81 41/36 97-0
TELEFAX + 49 (0) 81 41/36 97-30
E-MAIL info@plug-in.de
WWW.PLUG-IN.DE

ADRESSE
Am Sonnenlicht 5
D-82239 Alling bei München

Erwähnte Firmen- und Produktnamen sind zum Teil eingetragene Warenzeichen der jeweiligen Hersteller.

novus

Only 35 mm depth

Universal Indicator
N1540

Presentation

N1540 process meter was designed with advanced technology for highest performance and reliability in the most demanding applications. Based on an advanced and robust hardware platform, the **N1540** can be fully programmed via its front keypad or via a USB interface. The unique USB interface makes the programming task a simple one step fool proof operation. It allows, for example, the set up of several instruments with the same programming parameters with extreme ease while saving precious time.

The USB interface also provides an invaluable means for continuous monitoring of the measured process variable.

With a very short 35 mm (1.34 inches) depth enclosure, the **N1540** can be easily installed in panels and enclosures where space is at a premium. Dual alarm relays and a convenient 24 V auxiliary power supply are also available in this competitively priced process meter.

Technical Characteristics

- Accepts thermocouples J, K, T, E, N, R, S, B, Pt100, 0-50 mV, 0-5 Vdc, 0-10 Vdc, 0-20 mA and 4-20 mA
- Temperature in °C or °F
- Adjustable indication offset
- Adjustable digital filter
- Programmable indicating range from -1999 to 9999
- Sampling rate: up to 50 measurements per second
- Two relay alarms: SPST 1.5 A / 240 Vac
- Alarm funtions: LO, HI, differential, differential LO, differential HI, sensor break
- Alarm initial blocking
- Alarm hysteresis
- Flash function (display flashes under alarm condition
- Detachable wire connectors
- Bright 14 mm display
- Recorded maximum HI and minimum LO values can be retrieved via keypad
- Password for configuration protection
- Auxiliary 24 Vdc voltage source
- USB Interface for configuration and monitoring
- Factory configuration parameters retrieval
- IP65 UL 94 V-2 front; IP20 UL 94V-0 enclosure
- Silicone rubber keypad
- CE and UL certification
- Size: 96 x 48 x 35 mm
- Power: 100~240 Vac/dc ±10%

OPTIONS:

- RS485 Modbus RTU serial communication
- Power: 12 to 24 Vac/dc

Models

N1540-USB	Basic Indicator USB
N1540-485-USB	Basic Indicator USB + RS485
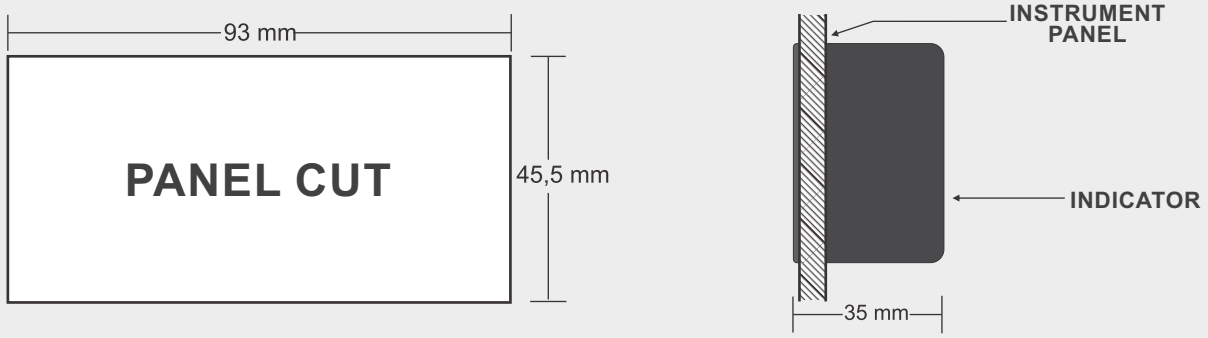
Panel Mounting