DATENBLATT

BP-ECS9200/9100-Serie

HABEN SIE FRAGEN ODER
WÜNSCHEN SIE EIN INDIVIDUELLES ANGEBOT?
Unser Team berät Sie gerne persönlich.

TELEFON + 49 (0) 81 41/36 97-0
TELEFAX + 49 (0) 81 41/36 97-30
E-MAIL info@plug-in.de
WWW.PLUG-IN.DE

ADRESSE
Am Sonnenlicht 5
D-82239 Alling bei München

Erwähnte Firmen- und Produktnamen sind zum Teil eingetragene Warenzeichen der jeweiligen Hersteller.

BP-ECS9200/9100 Serie

Quad Core Intel® Xeon®/Core™ i7/i5/i3 (Skylake/Kaby Lake) Fanless Embedded System with Intel® C236, 6 GigE LAN with 4 M12 PoE+, 2 Front-access SSD/HDD Tray, 1 PCI/PCIe x16 Slot, 8 USB 3.0, M.2 Socket, 3 SIM, 32 Isolated DIO, High Performance, Rugged, -40°C to 75°C Extended Temerature

- 6 Independent GigE LAN with 4 M12 IEEE 802.3at PoE+
- Expansion: 1 PCI/PCIe x16, 3 Mini PCIe/mSATA, 1 M.2
- PCIe x16 expansion supports up to 160W Power Budget
- Storage: 2 2.5" SSD Tray, 1 CFast, 2 SATA III
- 6V to 36V DC Power Input with 80V Surge Protection
- Configurable Ignition Power Control
- Fanless, -40°C to 75°C Operating Temperature
- 32 Isolated DIO, 8 USB 3.0
- LGA 1151 Socket supports workstation-grade Intel® Xeon®/Core™ i7/i5/i3 Processor with C236
- DVI-I, DVI-D & DisplayPort interfaces, up to 4K display
- 3 External SIM Socket for 3G/4G/LTE/WiFi/GPRS/UMTS

Vehicle Computing

Machine Vision

Smart Manufacturing

Intelligent Surveillance

Robot Control

M12 4K PoE Isolated DIO SIM M.2 SS TPM 6V~36V 80V -40° 75°

E13 EN50155 CE FC RoHS

Vecow

Dimensions & Drawing

Unit: mm (inch)

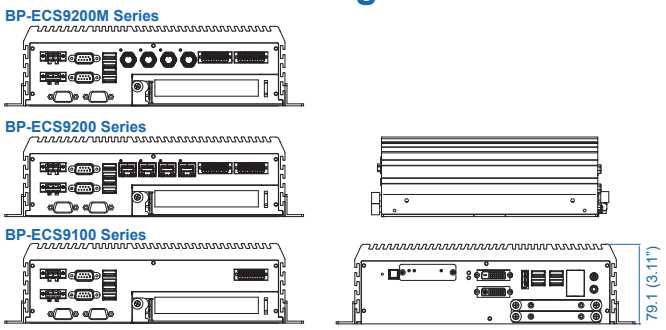

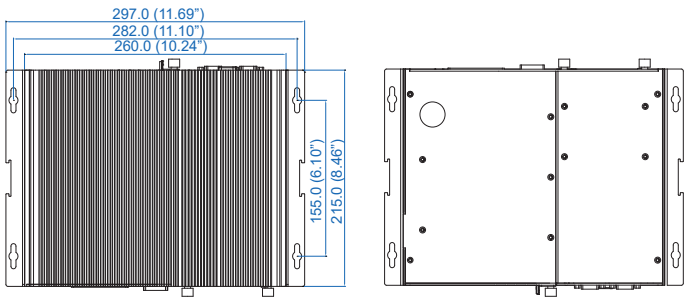

Specifications

System

Processor	Quad Core Intel® Xeon®/Core™ i7/i5/i3 Processor (Skylake-S/Kaby Lake-S)
Chipset	Intel® C236
BIOS	AMI
SIO	IT8786E
Memory	2 DDR4 2400/2133 MHz SO-DIMM, up to 32GB (ECC/Non-ECC)

I/O Interface

Serial	4 COM RS-232/422/485 (ESD 8KV)
USB	• 8 USB 3.0 (4 Front, 4 Rear) • 1 USB 2.0 (Internal)
Isolated DIO	**BP-ECS9200 :** 32 Isolated DIO : 16 DI, 16 DO **BP-ECS9100 :** 16 GPIO
LED	Power, HDD, Wireless, PoE
SIM Card	3 External SIM Card Socket

Expansion

Mini PCIe	3 Full-size for PCIe/USB/External SIM Card/mSATA
PCI/ PCIe	1 PCI/PCIe x16 Slot (PCIe x16 supports up to 160W Power Budget)
M.2	1 M.2 Socket (Key ID : M)

Graphics

Processor	Intel® HD Graphics P630/630/P530/530
Interface	• DVI-I : Up to 1920 x 1200 @ 60Hz • DVI-D : Up to 1920 x 1200 @ 60Hz • DisplayPort : Up to 4096 x 2304 @ 60Hz

Storage

SATA	2 SATA III (6Gbps) support S/W RAID 0, 1
mSATA	3 SATA III (Mini PCIe Type, 6Gbps)
Storage Device	• 1 CFast Socket, Push-in/Push-out Ejector • 2 Front-access 2.5" SSD/HDD Tray

Audio

Audio Codec	Realtek ALC892, 5.1 Channel HD Audio
Audio Interface	1 Mic-in, 1 Line-out

Ethernet

LAN 1	Intel® I219LM GigE LAN supports iAMT 11.0
LAN 2	Intel® I210 GigE LAN

PoE (BP-ECS9200)

LAN 3 to LAN 6	GigE IEEE 802.3at (25.5W/48V) PoE+ by Intel® I210, M12 Connector (BP-ECS9200M)

Power

Power Input	6V to 36V, DC-in
Power Interface	3-pin Terminal Block : V+, V-, Frame Ground
Ignition Control	16 Mode (Internal)
Remote Switch	3-pin Terminal Block
Surge Protection	Up to 80V/1ms Transient Power

Others

TPM	Optional Infineon SLB9665 supports TPM 2.0, LPC Interface
Watchdog Timer	Reset : 1 to 255 sec./min. per step
Smart Management	Wake on LAN, PXE supported
HW Monitor	Monitoring temperature, voltages. Auto throttling control when CPU overheats.

Software Support

OS	Windows 10, Windows 8.1, Windows 7, Linux

Mechanical

Dimensions	260mm x 215mm x 79mm (10.2" x 8.5" x 3.1")
Weight	4.2 kg (9.26 lb)
Mounting	• Wallmount by mounting bracket • 2U Rackmount (Optional)

Environment

Operating Temp.	**35W TDP CPU :** • Core™ i7, i5, i3 : -40°C to 75°C (-40°F to 167°F) • Xeon® E3-1268L v5 : -40°C to 70°C (-40°F to 158°F) **65W TDP CPU :** Core™ i7, i5, i3 : -40°C to 55°C (-40°F to 131°F) **80W TDP CPU :** Xeon® E3-1275 v6, E3-1275 v5, E3-1225 v5 : -40°C to 45°C (-40°F to 113°F)
Storage Temp.	-40°C to 85°C (-40°F to 185°F)
Humidity	5% to 95% Humidity, non-condensing
Relative Humidity	95% @ 75°C
Shock	• IEC 60068-2-27 • SSD : 50G @ wallmount, Half-sine, 11ms
Vibration	• IEC 60068-2-64 • SSD : 5Grms, 5Hz to 500Hz, 3 Axis
EMC	E13, CE, FCC, EN50155, EN50121-3-2

Order Information

BP-ECS9210M	• BP-ECS9200, 6 GigE LAN w/4 A-coded M12 PoE+, 2 SSD Tray, 1 PCIe x16, 8 USB 3.0, 4 COM, 3 SIM, 32 Isolated DIO
BP-ECS9210	• BP-ECS9200, 6 GigE LAN w/4 PoE+, 2 SSD Tray, 1 PCIe x16, 8 USB 3.0, 4 COM, 3 SIM, 32 Isolated DIO
BP-ECS9201M	• BP-ECS9200, 6 GigE LAN w/4 A-coded M12 PoE+, 2 SSD Tray, 1 PCI, 8 USB 3.0, 4 COM, 3 SIM, 32 Isolated DIO
BP-ECS9201	• ECS-9200, 6 GigE LAN w/4 PoE+, 2 SSD Tray, 1 PCI, 8 USB 3.0, 4 COM, 3 SIM, 32 Isolated DIO
BP-ECS9110	• BP-ECS9100, 2 GigE LAN, 2 SSD Tray, 1 PCIe x16, 8 USB 3.0, 4 COM, 3 SIM, 16 GPIO
BP-ECS9101	• BP-ECS9100, 2 GigE LAN, 2 SSD Tray, 1 PCI, 8 USB 3.0, 4 COM, 3 SIM, 16 GPIO
DDR4 32G	• Certified DDR4 32GB 2666MHz RAM
DDR4 16G	• Certified DDR4 16GB 2400/2133 MHz RAM
DDR4 8G	• Certified DDR4 8GB 2400/2133 MHz RAM
DDR4 4G	• Certified DDR4 4GB 2400/2133 MHz RAM
PWA-280W-WT	• 280W, 24V, 85V AC to 264V AC Power Adaptor with 3-pin Terminal Block, Wide Temperature -30°C to +70°C
PWA-160W-WT	• 160W, 24V, 85V AC to 264V AC Power Adaptor with 3-pin Terminal Block, Wide Temperature -30°C to +70°C
PWA-120W	• 120W, 24V, 90V AC to 264V AC Power Adapter with 3-pin Terminal Block
VESA Mount	• VESA Mounting Kit
DIN-RAIL Kit	• DIN Rail and VESA Mounting Kit
Rack Mount	• 2U Rackmount Kit
TMK2-20P-100	• Terminal Block 20-pin to Terminal Block 20-pin Cable, 100cm
TMK2-20P-500	• Terminal Block 20-pin to Terminal Block 20-pin Cable, 500cm
TMB-TMBK-20P	• Terminal Board with One 20-pin Terminal Block Connector and DIN-Rail Mounting
4G Module	• Mini PCIe 4G/GPS Module with Antenna
WiFi & Bluetooth	• WiFi & Bluetooth Module with Antenna

CPU List

Series	CPU	Cache (MB)	Turbo Freq. (GHz)	TDP (W)	ECC Memory
Intel® Xeon®	E3-1275 v6	8	4.2	80	Y
	E3-1275 v5		4	80	
	E3-1225 v5		3.7	80	
	E3-1268L v5		3.4	35	
Intel® Core™	i7-7700	8	4.2	65	NA
	i7-7700T		3.8	35	
	i7-6700		4	65	
	i7-6700TE		3.4	35	
	i5-7500	6	3.8	65	NA
	i5-7500T		3.3	35	
	i5-6500		3.6	65	
	i5-6500TE		3.3	35	
	i3-7101E	3	3.9	65	Y
	i3-7101TE		3.4	35	
	i3-6100	4	3.7	65	
	i3-6100TE		2.7	35	

20181116

* All product information may subject to change without prior notice.
* The rights of all brand names, product names and trademarks belong to their respective owners.
Copyright © 2018 Vecow Co., Ltd. All rights reserved.

Vecow