DATENBLATT

8B38

HABEN SIE FRAGEN ODER
WÜNSCHEN SIE EIN INDIVIDUELLES ANGEBOT?
Unser Team berät Sie gerne persönlich.

TELEFON + 49 (0) 81 41/36 97-0
TELEFAX + 49 (0) 81 41/36 97-30
E-MAIL info@plug-in.de
WWW.PLUG-IN.DE

ADRESSE
Am Sonnenlicht 5
D-82239 Alling bei München

Erwähnte Firmen- und Produktnamen sind zum Teil eingetragene Warenzeichen der jeweiligen Hersteller.

8B38

Strain Gage Input Modules, Wide and Narrow Bandwidth

Description

8B modules are an optimal solution for monitoring real-world process signals and providing high level signals to a data acquisition system. Each 8B38 module isolates, filters and amplifies a full-bridge strain gage input signal and provides an analog voltage output.

The 8B38 can interface to tranducers with a nominal resistance of 100Ω to 2kΩ. Bridge excitation is provided from the module with a stable 10.00V or 3.33V source. Full scale sensitivities of 2mV/V and 3mV/V are offered as standard.

Signal filtering is accomplished with a five-pole filter optimized for time and frequency response which provides 100dB per decade of normal-mode-rejection above the filter cutoff frequency. One pole of this filter is on the field side of the isolation barrier for anti-aliasing, and the other four are on the system side.

A special input circuit on the 8B38 module provides protection against accidental connection of power-line voltages up to 240VAC. Clamp circuits on the I/O and power terminals protect against harmful transients.

Isolation is provided by transformer coupling to suppress transmission of common mode spikes or surges. The module is powered from +5VDC, ±5%.

The modules are designed for installation in Class I, Division 2 hazardous locations and have a high level of immunity to environmental noise.

▶ Features

- Interfaces to 100Ω Thru 2kΩ Full-Bridge Strain Gages
- High Level Voltage Outputs
- 1500Vrms Isolation
- ANSI/IEEE C37.90.1 Transient Protection
- Input Protected up to 240VAC Continuous
- 100dB CMR
- 3Hz or 8kHz Signal Bandwidth
- ±0.05% Accuracy
- ±0.02% Linearity
- Low Drift with Ambient Temperature
- UL Listing Pending
- Mix and Match Module Types on Backpanel

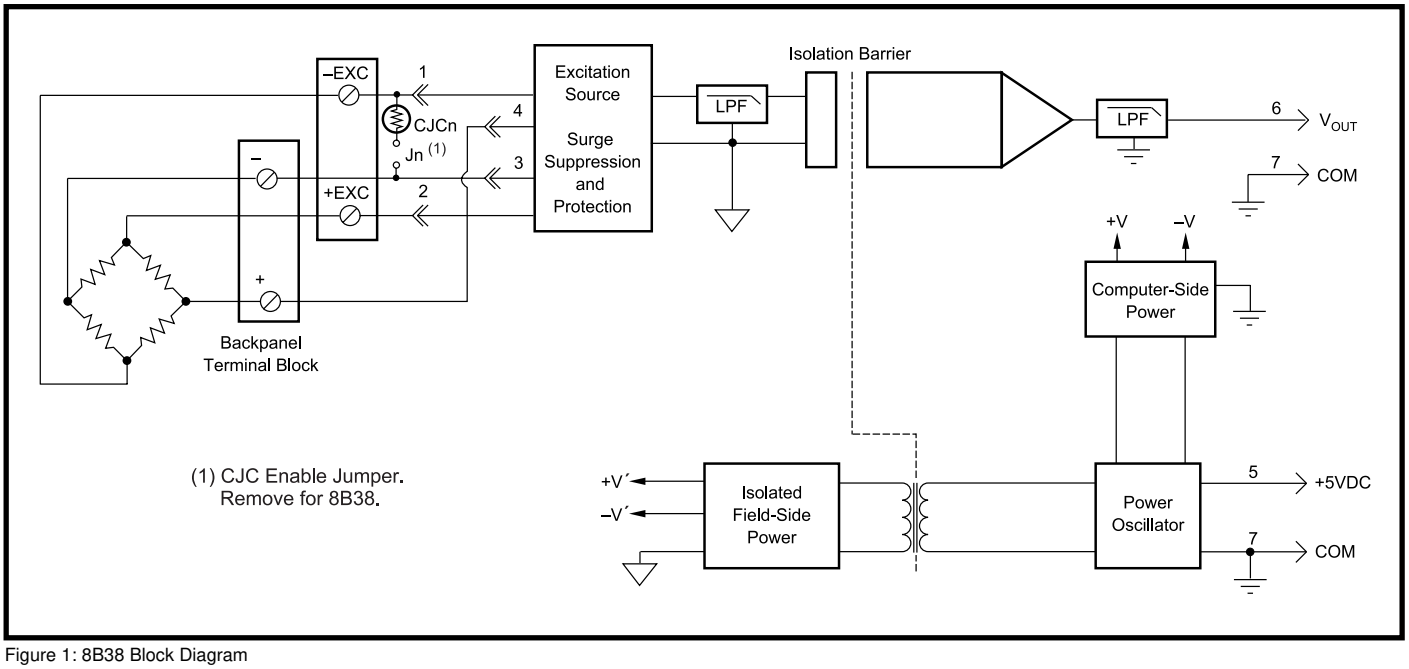

Figure 1: 8B38 Block Diagram

Specifications

Typical at T_A=+25°C and +5V power

Module	8B38-0x	8B38-3x
Input Range	±10mV to ±100mV	*
Input Bias Current	±0.5nA	*
Input Resistance		
Normal	50MΩ	*
Power Off	200kΩ	*
Overload	200kΩ	*
Input Protection		
Continuous(1)	240VAC	*
Transient	ANSI/IEEE C37.90.1	*
Excitation Output (-x1)	+3.333V ±2mV	*
Load Resistance	100Ω to 2kΩ	*
Excitation Output (-x2,-x5)	+10V ±5mV	*
Load Resistance	300Ω to 2kΩ	*
Excitation Load Regulation	15ppm/mA	*
Excitation Stability	50ppm/°C	*
Excitation Protection	120VAC	*
CMV, Input to Output	1500Vrms max	*
Transient, Input to Output	ANSI/IEEE C37.90.1	*
CMR (50Hz or 60Hz)	100dB	*
NMR	100dB per decade above 8kHz	70dB at 60Hz
Accuracy(2)	±0.05% Span	*
Nonlinearity	±0.02% Span	*
Stability		
Offset	±25ppm/°C	*
Gain	±100ppm/°C	±75ppm/°C
Noise		
Output, 100kHz	1500µVrms	200µVrms
Bandwidth, –3dB	8kHz	3Hz
Response Time, 90% Span	70µs	150ms
Output Range	±5V	*
Output Protection	Continuous Short to Ground	*
Transient	ANSI/IEEE C37.90.1	*
Power Supply Voltage	+5VDC ±5%	*
Power Supply Current	110mA No Exc. Load	*
	150mA Full Exc. Load	*
Power Supply Sensitivity	±50ppm/%	*
Mechanical Dimensions (h)(w)(d)	1.11" x 1.65" x 0.40" (28.1mm x 41.9mm x 10.2mm)	*
Environmental		
Operating Temp. Range	–40°C to +85°C	*
Storage Temp. Range	–40°C to +85°C	*
Relative Humidity	0 to 95% Noncondensing	*
Emissions EN61000-6-4	ISM, Group 1	*
Radiated, Conducted	Class A	*
Immunity EN61000-6-2	ISM, Group 1	*
RF	Performance A ±0.5% Span Error	*
ESD,EFT,Surge,Voltage Dips	Performance B	*

NOTES:
* Same specification as 8B38-0x.
(1) 240VAC between + and – / +EXC / –EXC terminals. 120VAC between – and +EXC / –EXC terminals and between +EXC and –EXC terminals.
(2) Includes nonlinearity, hysteresis and repeatability.

Ordering Information

Model	Bandwidth	Input Range	Exc.	Sens.	Output Range
8B38-01	8kHz	-10mV to +10mV	+3.333V	3mV/V	-5V to +5V
8B38-02	8kHz	-30mV to +30mV	+10.0V	3mV/V	-5V to +5V
8B38-05	8kHz	-20mV to +20mV	+10.0V	2mV/V	-5V to +5V
8B38-31	3Hz	-10mV to +10mV	+3.333V	3mV/V	-5V to +5V
8B38-32	3Hz	-30mV to +30mV	+10.0V	3mV/V	-5V to +5V
8B38-35	3Hz	-20mV to +20mV	+10.0V	2mV/V	-5V to +5V