8B43

DC LVDT Input Modules

Description

8B modules are an optimal solution for monitoring real-world process signals and providing high-level signals to a data acquisition system. Each 8B43 module isolates, filters, and amplifies a voltage input signal and provides an analog voltage output (Figure 1).

The 8B43 can interface to transducers that will operate on a 10V excitation voltage and up to 30mA excitation current.

Signal filtering is accomplished with a 5-pole filter optimized for time and frequency response which provides 100dB per decade of normal-mode rejection above 1kHz. One pole of this filter is on the field side of the isolation barrier for anti-aliasing, and the other four are on the system side.

A special input circuit on the 8B43 modules provides protection against accidental connection of power-line voltages up to 240VAC. Clamp circuits on the I/O and power terminals protect against harmful transients.

Isolation is provided by transformer coupling to suppress transmission of common mode spikes or surges. The module is powered from +5VDC, ±5%.

The modules are designed for installation in Class I, Division 2 hazardous locations and have a high level of immunity to environmental noise.

Features

- Interfaces to DC Linear Voltage Displacement Transducers
- High-Level Voltage Outputs
- 1500Vrms Isolation
- ANSI/IEEE C37.90.1 Transient Protection
- Input Protection to 240VAC Continuous
- 100dB CMR
- 1kHz Signal Bandwidth
- ±0.05% Accuracy
- ±0.02% Linearity
- Low Drift with Ambient Temperature
- C-UL-US Listed
- CE Compliant
- ATEX Compliance Pending
- Mix and Match Module Types on Backpanel

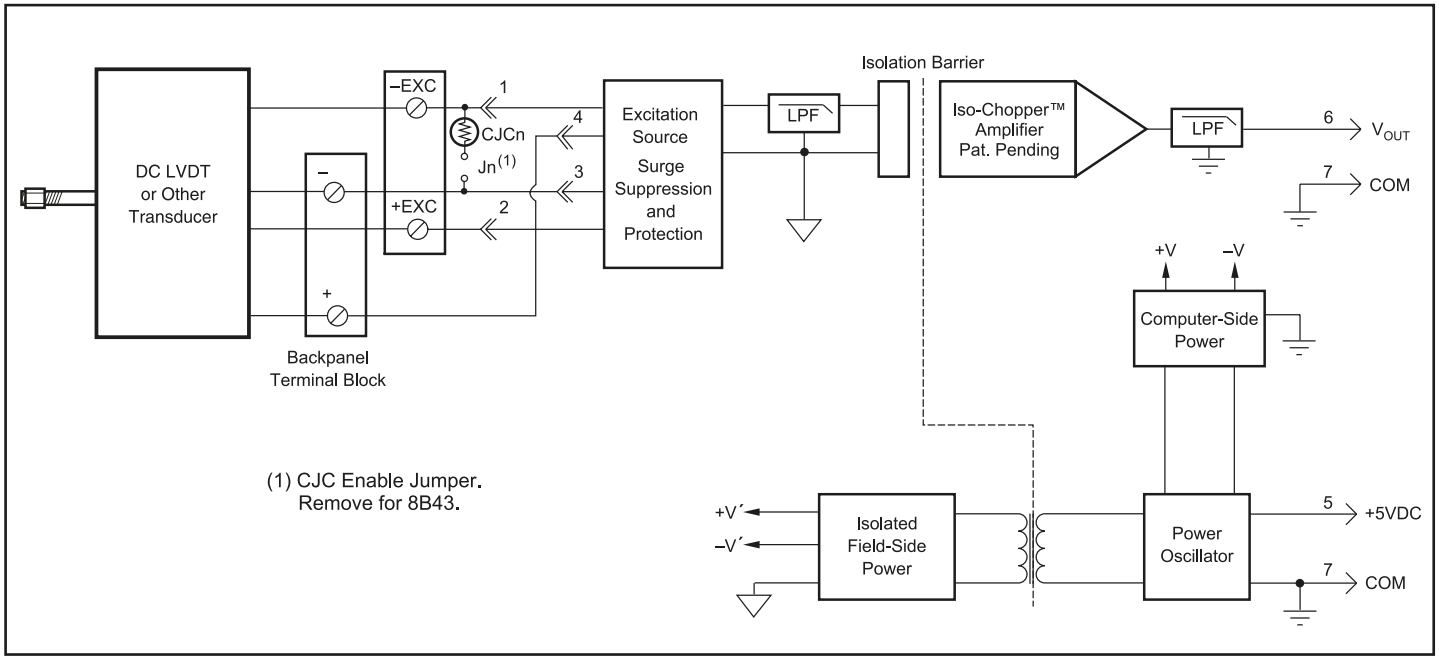

Figure 1: 8B43 Block Diagram

©1995-2017 Dataforth Corporation, All Rights Reserved ISO9001:2008-Registered QMS

Specifications

Typical* at T_A = +25°C and +5VDC power

Module	8B43
Input Range	±1V to ±5V
Input Bias Current	±0.05nA
Input Resistance	
Normal	2MΩ (minimum)
Power Off	2MΩ (minimum)
Overload	2MΩ (minimum)
Input Protection	
Continuous(1)	240VAC
Transient	ANSI/IEEE C37.90.1
Excitation	
Voltage	+10V ±5mV
Current	5mA min, 30mA max
Load Regulation	15ppm/mA
Stability	50ppm/°C
Protection	120VAC
CMV, Input to Output	1500Vrms max
Transient, Input to Output	ANSI/IEEE C37.90.1
CMR (50Hz or 60Hz)	100dB
NMR (-3dB at 1kHz)	100dB per Decade above 1kHz
Accuracy(2)	±0.05% Span
Linearity	±0.02% Span
Stability	
Offset	±25ppm/°C
Gain	±100ppm/°C
Noise	
Output, 100kHz	500µVrms
Bandwidth, –3dB	1kHz
Response Time, 90% Span	550µs
Output Range	See Ordering Information
Output Protection	Continuous Short to Ground
Transient	ANSI/IEEE C37.90.1
Power Supply Voltage	+5VDC ±5%
Power Supply Current	160mA Full Exc. Load
Power Supply Sensitivity	±100ppm/%
Mechanical Dimensions (h)(w)(d)	1.11" x 1.65" x 0.40" (28.1mm x 41.9mm x 10.2mm)
Environmental	
Operating Temp. Range	–40°C to +85°C
Storage Temp. Range	–40°C to +85°C
Relative Humidity	0 to 95% Noncondensing
Emissions EN61000-6-4	ISM, Group 1
Radiated, Conducted	Class A
Immunity EN61000-6-2	ISM, Group 1
RF	Performance A ±0.5% Span Error
ESD,EFT	Performance B

NOTES:
*Contact factory or your local Dataforth sales office for maximum values.
(1) 240VAC between +Input terminal and –Input, +EXC, or –EXC terminals.
120VAC between –Input and +EXC or –EXC terminals.
120VAC between +EXC and –EXC terminals.
(2) Includes linearity, hysteresis and repeatability.

Ordering Information

Model	Input Range	Output Range
8B43-01	–1V to +1V	–5V to +5V
8B43-02	–2V to +2V	–5V to +5V
8B43-03	–3V to +3V	–5V to +5V
8B43-04	–4V to +4V	–5V to +5V
8B43-05	–5V to +5V	–5V to +5V
8B43-11	–1V to +1V	0V to +5V
8B43-12	–2V to +2V	0V to +5V
8B43-13	–3V to +3V	0V to +5V
8B43-14	–4V to +4V	0V to +5V
8B43-15	–5V to +5V	0V to +5V

Installation Notes:

1.) This Equipment is Suitable for Use in Class I, Division 2, Groups A, B,C, D, or Non-Hazardous Locations Only.

2.) WARNING - Explosion Hazard - Substitution of Any Components May Impair Suitability for Class I, Division 2.

3.) WARNING - Explosion Hazard - Do Not Disconnect Equipment Unless Power Has Been Switched Off or The Area is Known to be Non-Hazardous.

©1995-2017 Dataforth Corporation, All Rights Reserved ISO9001:2008-Registered QMS